DIAMOND SHIELD
Advanced Paint Protection System

Fleetwood 2005-08
Model: Fiesta - Not Full Paint

Parts:
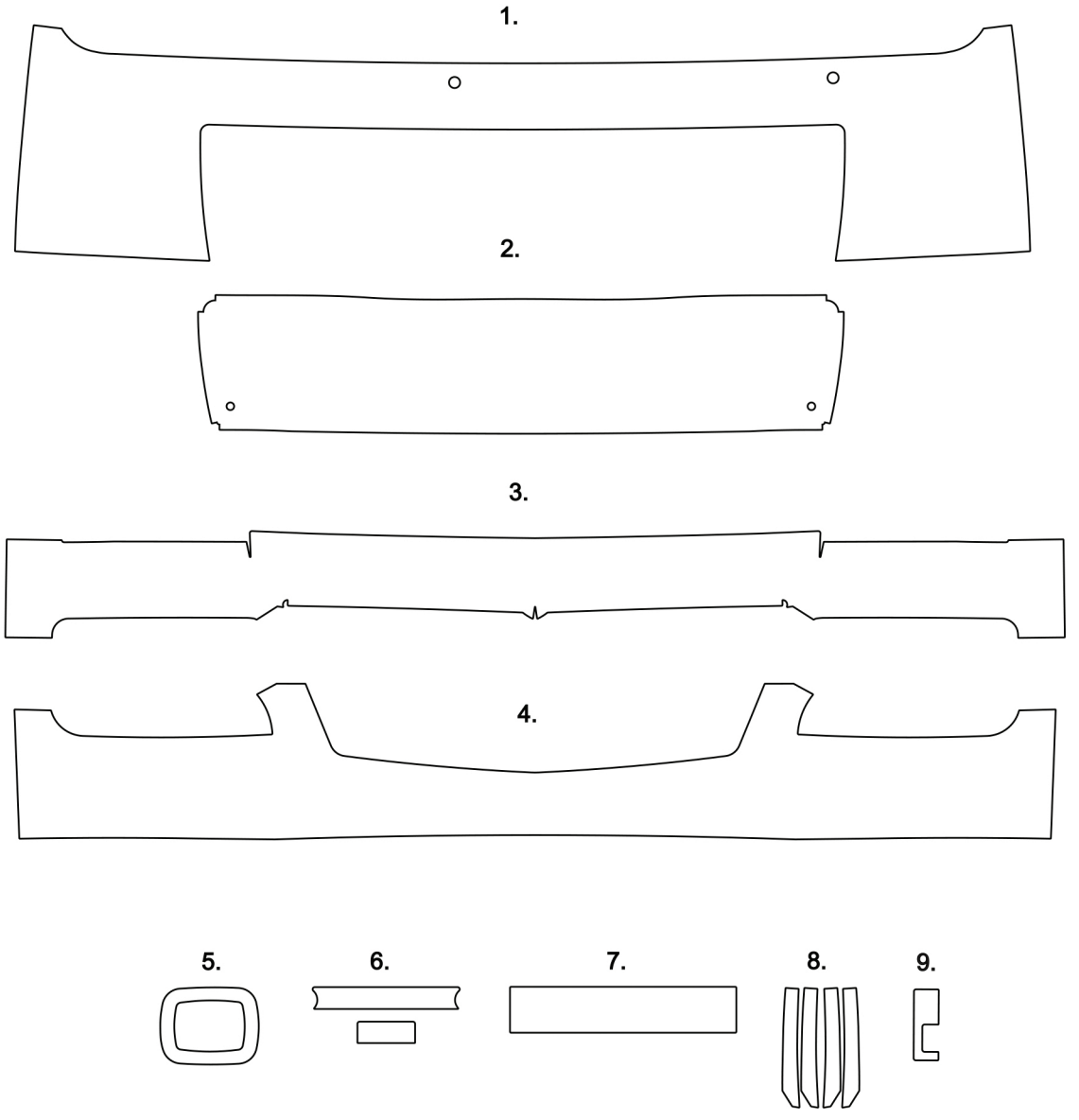
1. HEADER
2. HOOD
3. UPPER BUMPER
4. LOWER BUMPER
5. DOOR LATCH
6. GRAB HANDLE
7. KICK PLATE
8. WHEEL WELLS
9. DOOR STOP